Remarks: WAS A2200

PDC	01–01
SURFACE AREA	

PRINTED COPIES ARE UNCONTROLLED

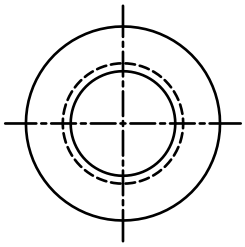

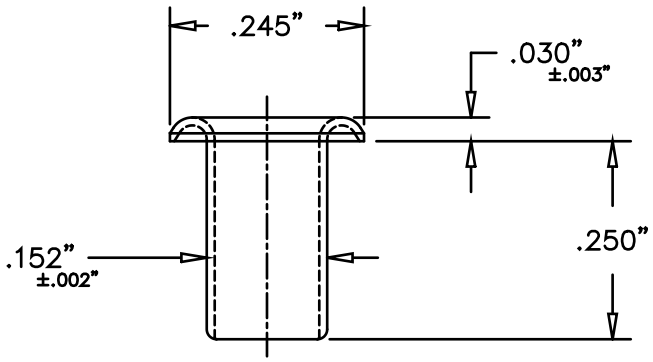

HOLE SIZE
BEFORE FINISHING: .127" +.000" −.002"

MATERIAL
70/30 BRASS
C.R. STEEL
5050 ALUM.
(B)- 65/35 BRASS

TOLERANCES:– Unless otherwise specified. DECIMALS ±.005" FRACTIONS ±.008" ANGLES ±1/2°

NO.	ALTERATION	DATE	BY	APP'D
B	ADDED 65/35 BRASS	9/12/13	OFF.	RF
A	WAS REDRAWN 5/30/79	3/9/88	OFF.	

Stimpson CO. INC.
1515 SW 13TH CT POMPANO BEACH, FL 33069

PART NAME: EYELET
MATERIAL: SEE TABLE SIZE: .010"
SCALE: 4=1 DEPT: PW. PR.

DRAWN: L.T.	CHECKED: B.F.	APP'D: R.F.B.
DATE: 3.9.88	DATE: 3.10.88	DATE: 3.12.88

PART No. GS5-8